planika
INTELLIGENT FIRE

PushButtonFireplaces

intelligent fire

© PLANIKA I Ver. 04122017

www.PLANIKAfires.com

PrimeFire Logs in casing

An automatic bio fireplace decorated with eco logs

Innovative technology that makes fire exceptional

FEATURES:

- Natural flames with decorative logs and vermiculite
- BEV* Technology
- No smell / no ash / no smoke
- Optional remote control
- Advanced safety sensors
- Automatic shutdown in case of errors
- Child Lock
- Advanced microprocessor
- Diode display
- Intuitive control
- 2 levels of flame height
- Easy installation
- No additional installation
- No additional ventilation required
- No chimney required
- For indoor use
- Eco-friendly
- Advanced microprocessor
- Automatic refueling system

* BEV Technology – A patented process resulting in the clean burning of bio-ethanol fuel vapours.

DIMENSIONS:

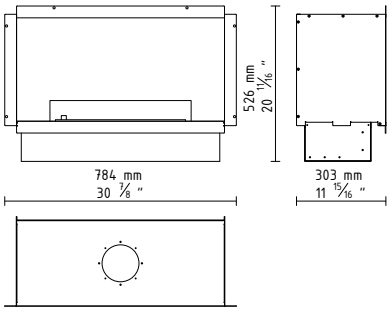

TECHNICAL DATA:

Capacity: 2,5 L / [US] 0,65 gal / [UK] 0,55 gal
Burning time: 4,5-7h
Heat output: 2-3,1 kw / 6690 - 10512 BTU/h
Net weight: 48 kg / 106 lbs
Air circulation: min. 1/h
Minimum room size:
please contact our Project Department for details
Power supply: 230 V / 115 V
Finish:
TOP: black powder coated steel,
CASING: black powder coated steel

INDOOR INSTALLATION REQUIREMENTS:

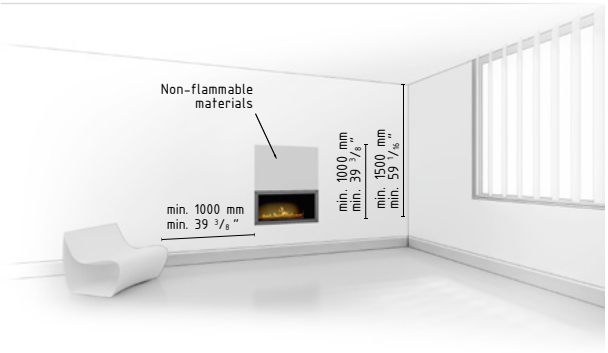

download **PRODUCT INSTRUCTION**
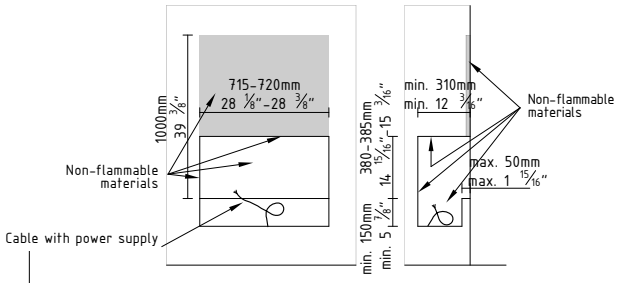
INSTALLATION: